REVISIED RESI. HIGH-RISE BUILDING PLAN ON T.P.S.- 68 (SIMADA-PUNA) MOJE : PUNA, F.P. NO -34, O.P. - 34, BLOCK NO -234,TAL.- CITY, DIST.- SURAT.

DRG. NO - 2/5
GROUND FLOOR

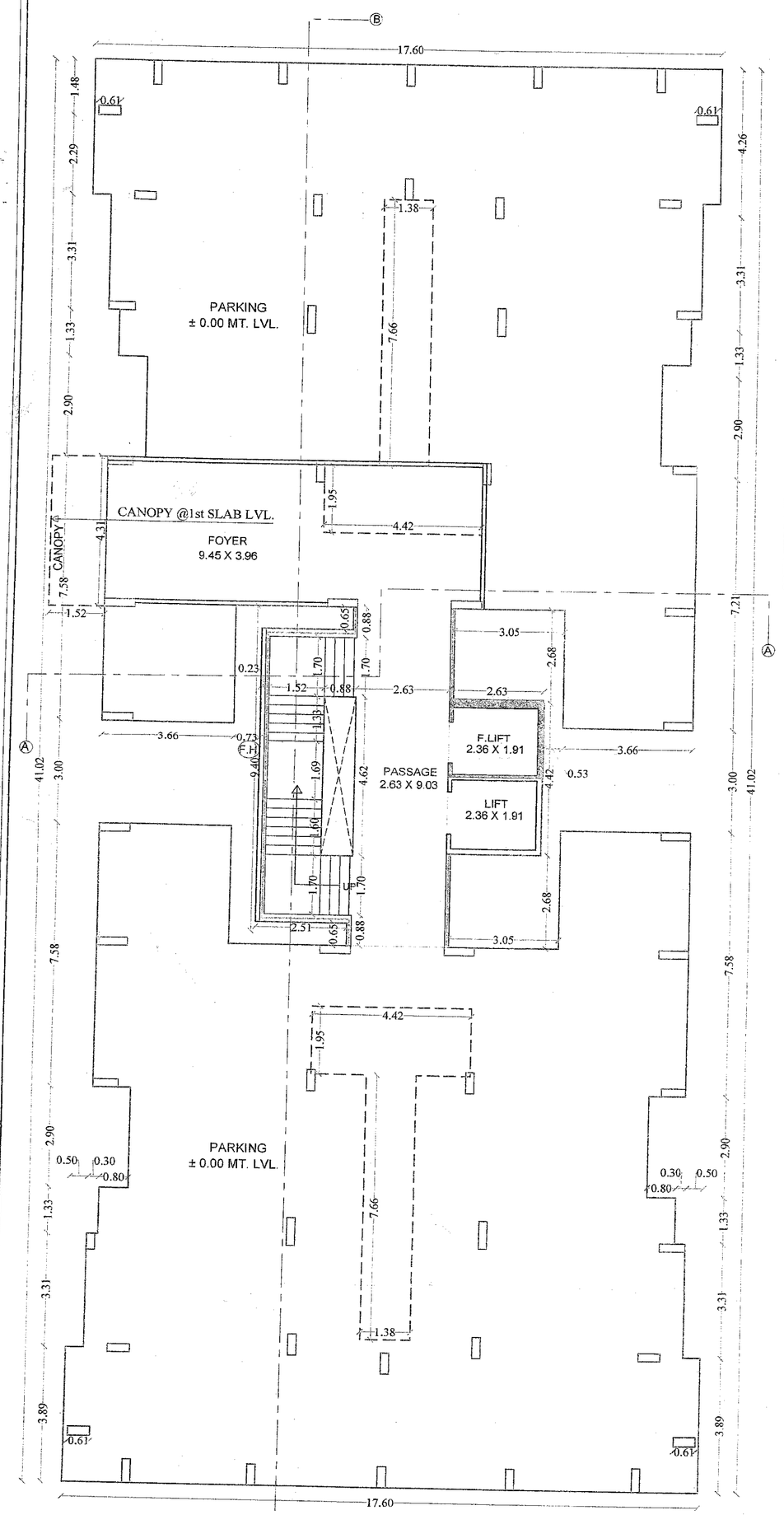

GROUND FLOOR PLAN

± 0.00 MT. LVL.

SCALE 1 CM.= 1 MT.

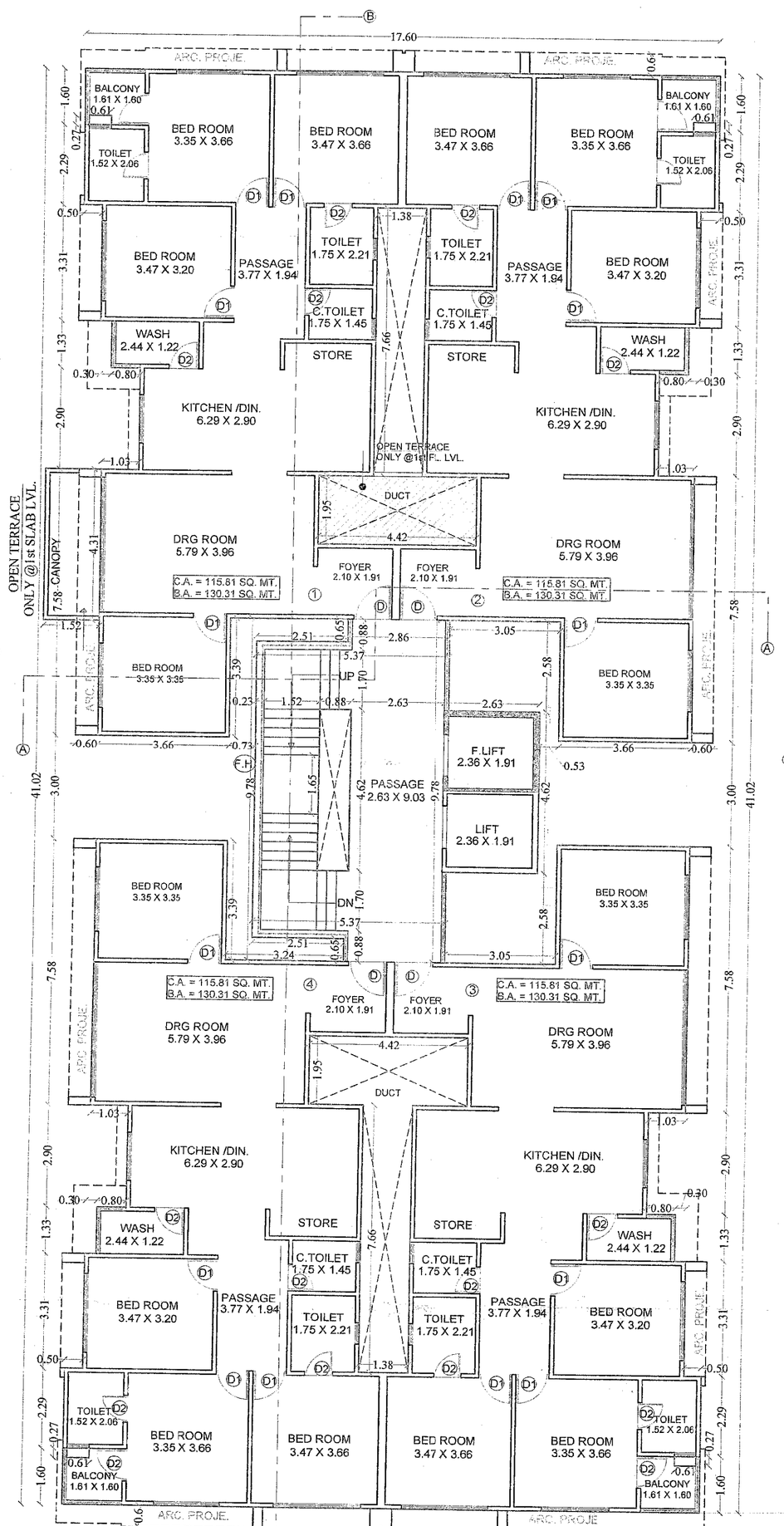

(1st FLOOR) PLAN

SCALE 1 CM.= 1 MT.

ALL ARCHITECTURE PROJECTION ARE AT LINTEL LEVEL.

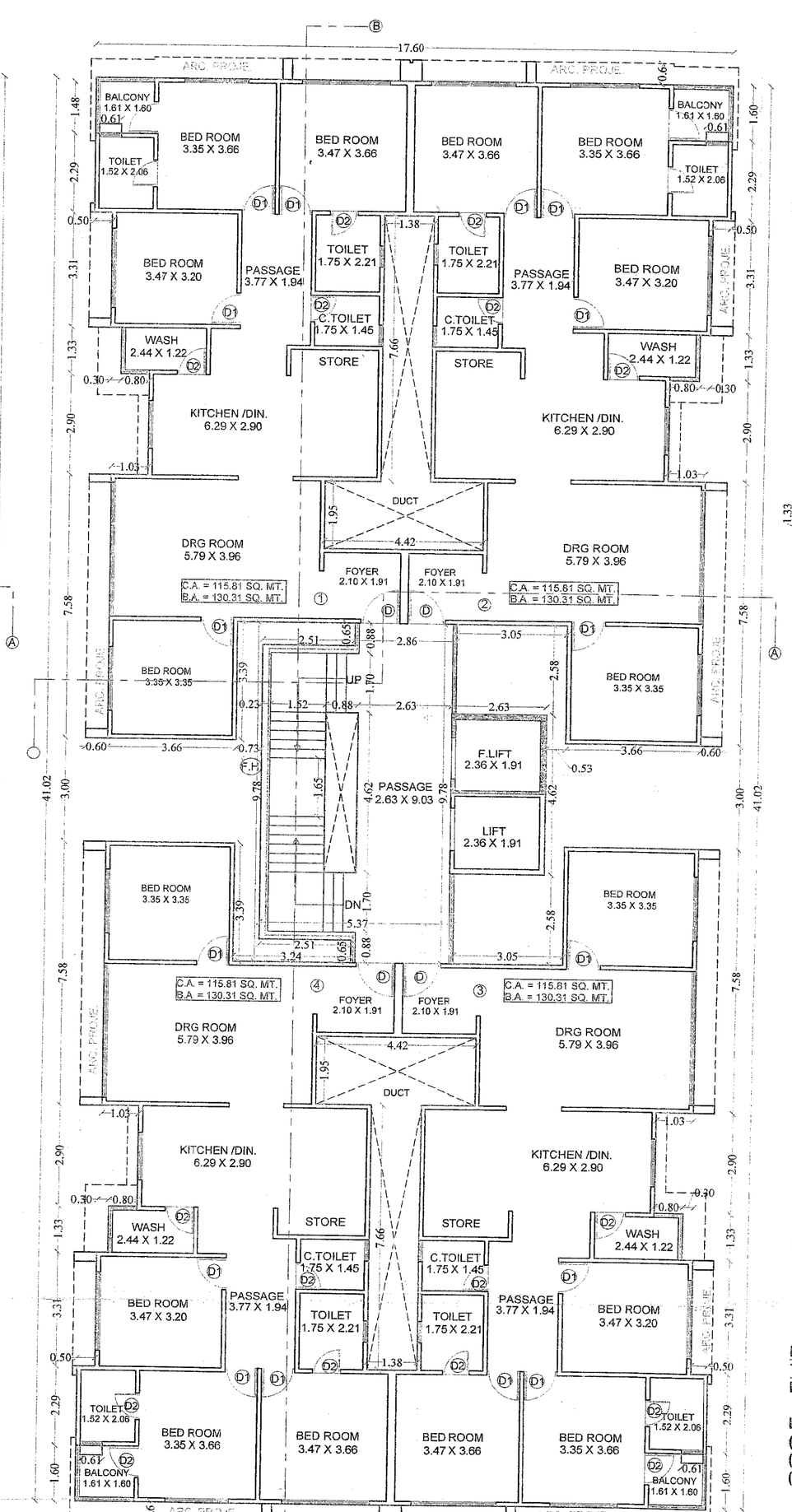

TYPICAL FLOOR PLAN

(2nd TO 10th FLOOR)

SCALE 1 CM.= 1 MT.

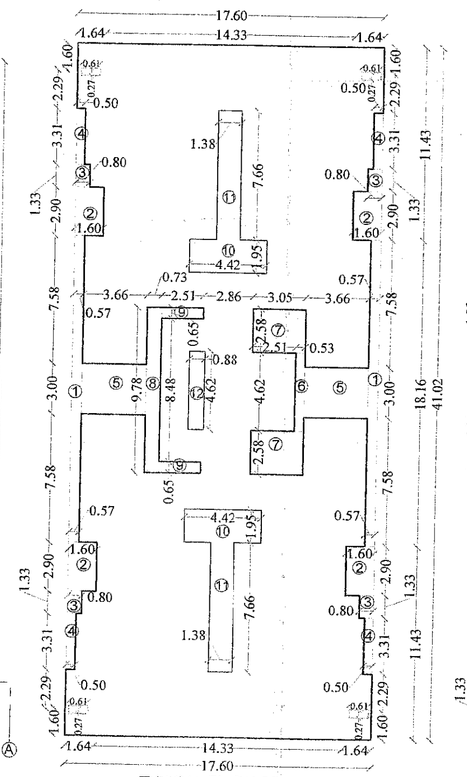

TYPICAL FL. DIAGRAM

B.UP AREA CALCULATION FOR TYPICAL FL.(2nd TO 10th)

17.60 X 41.02 = 721.95 SQ.MT

DEDUCT

(1) 2 X 0.57 X 18.16 = 20.70 SQ.MT.
(2) 4 X 1.60 X 2.90 = 18.56 SQ.MT.
(3) 4 X 0.80 X 1.33 = 4.25 SQ.MT.
(4) 4 X 0.50 X 3.31 = 6.62 SQ.MT.
(5) 2 X 3.66 X 3.00 = 21.96 SQ.MT.
(6) 1 X 0.53 X 4.62 = 2.45 SQ.MT.
(7) 2 X 3.05 X 2.58 = 15.74 SQ.MT.
(8) 1 X 0.73 X 9.78 = 7.14 SQ.MT.
(9) 2 X 2.51 X 0.65 = 3.26 SQ.MT.
(10) 2 X 4.42 X 1.95 = 17.24 SQ.MT.
(11) 2 X 1.38 X 7.66 = 21.14 SQ.MT.
(12) 1 X 0.88 X 4.62 = 4.06 SQ.MT.
(13) 4 X 0.61 X 0.27 = 0.66 SQ.MT.
= 143.77 SQ.MT.

TOTAL B.UP AREA = 721.95 - 143.77
= 578.18 SQ.MT.

F.S.I CALCULATION FOR TYPICAL FL. (2nd TO 10th)

BUILT UP AREA = 578.18 SQ. MT.

LESS STAIR,LIFT & PASSAGE

(1) 5.37 X 8.48 = 45.54 SQ.MT
(2) 2.51 X 4.60 = 11.54 SQ.MT
= 57.08 SQ.MT.

DEDUCT

0.88 X 4.62 = 4.06 SQ. MT.
= 53.02 SQ. MT.

TOTAL F.S.I./FL = 578.18 - 53.02
= 525.16 SQ. MT.

F.S.I CALCULATION FOR TYPICAL FL. (1st)

BUILT UP AREA = 586.80 SQ. MT.

LESS STAIR,LIFT & PASSAGE

(1) 5.37 X 8.48 = 45.54 SQ.MT
(2) 2.51 X 4.60 = 11.54 SQ.MT
(10)1 X 4.42 X 1.95 = 8.62 SQ.MT.
= 65.70 SQ.MT.

DEDUCT

0.88 X 4.62 = 4.06 SQ. MT.
= 61.64 SQ. MT.

TOTAL F.S.I./FL = 586.80 - 61.64
= 525.16 SQ. MT.

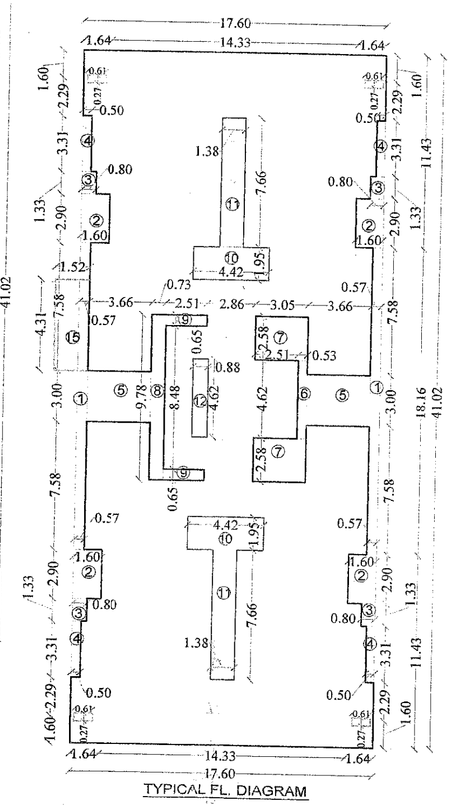

TYPICAL FL. DIAGRAM

B.UP AREA CALCULATION FOR GR. FL.

17.60 X 41.02 = 721.95 SQ.MT

DEDUCT

(1) 2 X 0.57 X 18.16 = 20.70 SQ.MT.
(2) 4 X 1.60 X 2.90 = 18.56 SQ.MT.
(3) 4 X 0.80 X 1.33 = 4.25 SQ.MT.
(4) 4 X 0.50 X 3.31 = 6.62 SQ.MT.
(5) 2 X 3.66 X 3.00 = 21.96 SQ.MT.
(6) 1 X 0.53 X 4.62 = 2.45 SQ.MT.
(7) 2 X 3.05 X 2.58 = 15.74 SQ.MT.
(8) 1 X 0.73 X 9.78 = 7.14 SQ.MT.
(9) 2 X 2.51 X 0.65 = 3.26 SQ.MT.
(10) 1 X 4.42 X 1.95 = 8.62 SQ.MT.
(11) 2 X 1.38 X 7.66 = 21.14 SQ.MT.
(12) 1 X 0.88 X 4.62 = 4.06 SQ.MT.
(13) 0.61 x 0.27 x 4 = 0.66 SQ.MT.
= 135.15 SQ.MT.

TOTAL B.UP AREA = 721.95 - 135.15
= 586.80 SQ.MT.

ADD

(10) 1 X 4.42 X 1.95 = 8.62 SQ.MT.
(15) 1.52 X 4.31 = 6.55 SQ.MT.

TOTAL AREA = 586.80+ 6.55 +8.62
=601.97 SQ.MT.

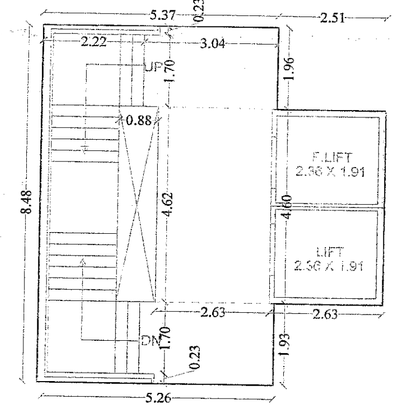

STAIR CASE DIAGRAM

Permission for sub division/amalgamation/ development as Sanctioned by Commissioner under the provisions of the Gujarat Town Planning and Urban Development Act, 1976 and the Bombay provisional Municipal Corporation Act, 1949 is granted for the Land bearing C. S. No./R.S. No./F.P. No.....34..... of Ward No./Moje/T.P.S. No. 68 (Puna-Simada) as per the attached plans and permission letter (Gujarathindi) vide outward No. T.D.O./DP/.....29..... dated 24/1/17

Date- 7/4 /2017

I/C. Town Planner,
Surat Municipal Corporation

Development permision is grantee to the condition that it shall be the responsibility of the applicant and his Architect/Engineer/Surveyor/Structura designer, to follow the relevant I. S specification in structural design to ensure safety of the buildings and as such structural designs are not verified. Unless renewed the validity of this Permission expires on Dt. 6/4/19

OWNER SIGNATURE

For MAJESTICA
P. H Savaliya
Partner

ENGINEER'S SIGN.

DEVANG L. MALAVIYA
165 - Neminath nagar
parvat patiya, surat.
98 98 61 29 59
TDO/ER/816.